WAH++ Technical and Lore Documentation

blah blah blah put general info here blah blah blah

SECTION 1: OVERVIEW

The Component Housing Unit (CHU) (A.K.A. “head”, “computer”, “monitor”, “TV”) is the container housing all the main components. It also serves as a head for the rest of the body. The whole unit is also waterproof and dustproof, rated IP69F by the Ingress Protection code.

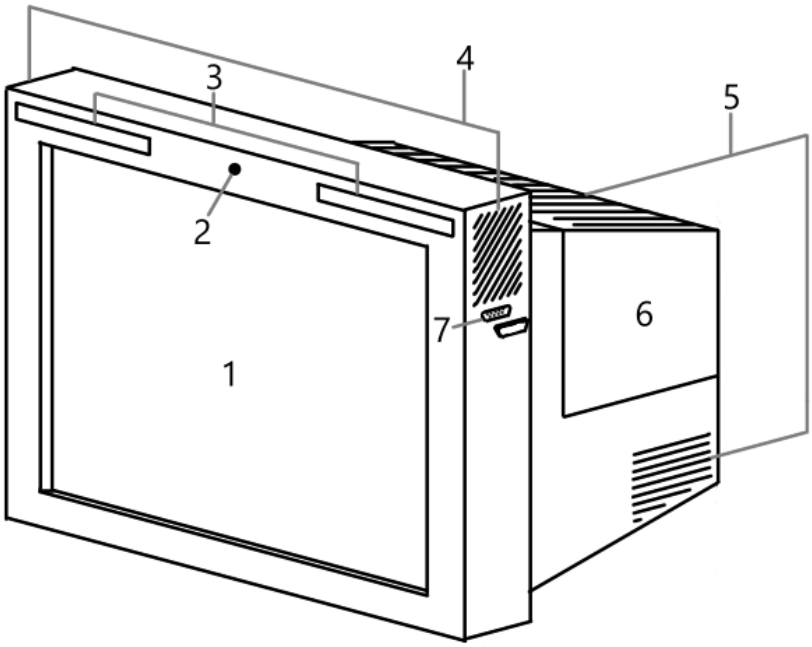

A diagram of all CHU components.

1 - Display
2 - Camera
3 - Lights
4 - Speakers
5 - Vents
6 - Access Hatch
7 - Serial Port and Dust Cover

SECTION 2: MATERIALS

The chassis of the CHU is made of an advanced lightweight composite material, consisting of carbon fiber for tensile strength, kevlar for bulletproofing, titanium for compressive strength and rubber for waterproofing.

insert diagram of the thing here which i will draw probably tomorrow

SECTION 3: DISPLAY

The display is a standard 12” 1920x1080 OLED screen behind a panel of curved bulletproof glass. The casing of version 1 of the CHU was salvaged from an old CRT monitor and the curved glass on version 2 is mostly an homage to version 1. However, it also improves the structural integrity of the glass.

SECTION 4: CAMERA

The camera is a 50MP HDR-capable camera with ability to see both visible light and infrared - one at a time, or both at once. This means it can function as a night vision or heat camera.

SECTION 5: LIGHTS

For lights, the CHU has 2 160 lumen light bars that can function in floodlight and spotlight modes, as well as being able to show any color of visible light (via RGB), IR and UV. They also have spring-loaded electronically controlled dust covers that are flush with the chassis and almost invisible when closed.

SECTION 6: SPEAKERS

There is a pretty standard stereo speaker system in the CHU that has been tuned to have a completely flat frequency response from 20 Hz to 30 KHz. These speakers can also go as loud as 85 dB and are usually used for Wah++’s voice.

SECTION 7: COOLING

Since there are powerful processing chips in the CHU, they need good cooling. For this, there are thermoelectric coolers with fans on top of the heat generating components, as well as fans behind the vents to dissipate heat at maximum efficiency.

SECTION 8: ACCESS HATCH

A part of the chassis that hinges on the bottom right edge. It is held closed by a magnet and can be opened electronically. The electronics inside prevent it from opening when the CHU is submerged in water.

SECTION 9: SERIAL PORT AND DUST COVER

The serial port is used for debugging. With it, it is possible to flash data to the electronics inside the CHU as well as alter and monitor different variables. This also allows for observing and changing the current state of mind, emotions, thoughts, memories, etc.